COMPONENT SIDE

REF	LOC	REF	LOC
IC5010	D4	TP5011	E1
IC5011	D4	TP5012	E1
IC5020	D3	TP5015	B1
IC5021	D3	TP5016	B1
IC5022	E3	TP5017	C3
P5001	C5	TP5018	B4
P5002	B2	TP5019	B3
P5003	A2	TP5020	A4
P5004	A4	VC5600	C2
P5005	B4	VC5601	C2
SW5008	C2	VC5700	B2
TG5001	C1	VC5701	B2
TG5002	A1	VR5001	D1
TG5003	E3	VR5002	D1
TG5005	B1	VR5003	D1
TG5006	C2	VR5004	D1
TG5007	C4	VR5005	A1
TG5008	B2	VR5006	A1
TG5009	A3	VR5007	B1
TP5001	C1	VR5008	B1
TP5002	D1	VR5009	C1
TP5003	C3	VR5010	B1
TP5007	D1	VR5011	C1
TP5008	D1	VR5012	C1
TP5009	E3	VR5013	E1
TP5010	E3	VR5014	D1

FOIL SIDE

REF	LOC	REF	LOC	REF	LOC
IC5001	D1	Q5007	D2	Q5702	A2
IC5002	B2	Q5008	E3	Q5703	E2
IC5003	B2	Q5600	D2	Q5704	A2
IC5004	A1	Q5601	B2	Q5705	E2
IC5005	B2	Q5602	B2	Q5706	B3
IC5006	A2	Q5603	D2	Q5707	B3
IC5007	A2	Q5604	B2	Q5708	D2
IC5008	B1	Q5605	C2	Q5709	D2
IC5009	B2	Q5606	C3	Q5710	D2
IC5012	A1	Q5607	C3	Q5711	D3
IC5013	A2	Q5608	C2	Q5712	D3
IC5014	B2	Q5609	C2	Q5713	E2
IC5015	B1	Q5610	C2	Q5714	A3
IC5016	B2	Q5611	C3	Q5715	A3
IC5017	B2	Q5612	C3	Q5716	E3
IC5018	C1	Q5613	D2	Q5717	E3
IC5019	E1	Q5614	B3	Q5718	E3
IC5051	D3	Q5615	B3	Q5719	D3
IC5052	D4	Q5616	D3	Q5720	B3
IC5053	D4	Q5617	D3		
IC5054	E3	Q5618	D3		
IC5055	D4	Q5619	D4		
Q5001	E3	Q5620	D4		
Q5002	A3	Q5621	C3		
Q5005	E2	Q5700	E2		
Q5006	D2	Q5701	A2		

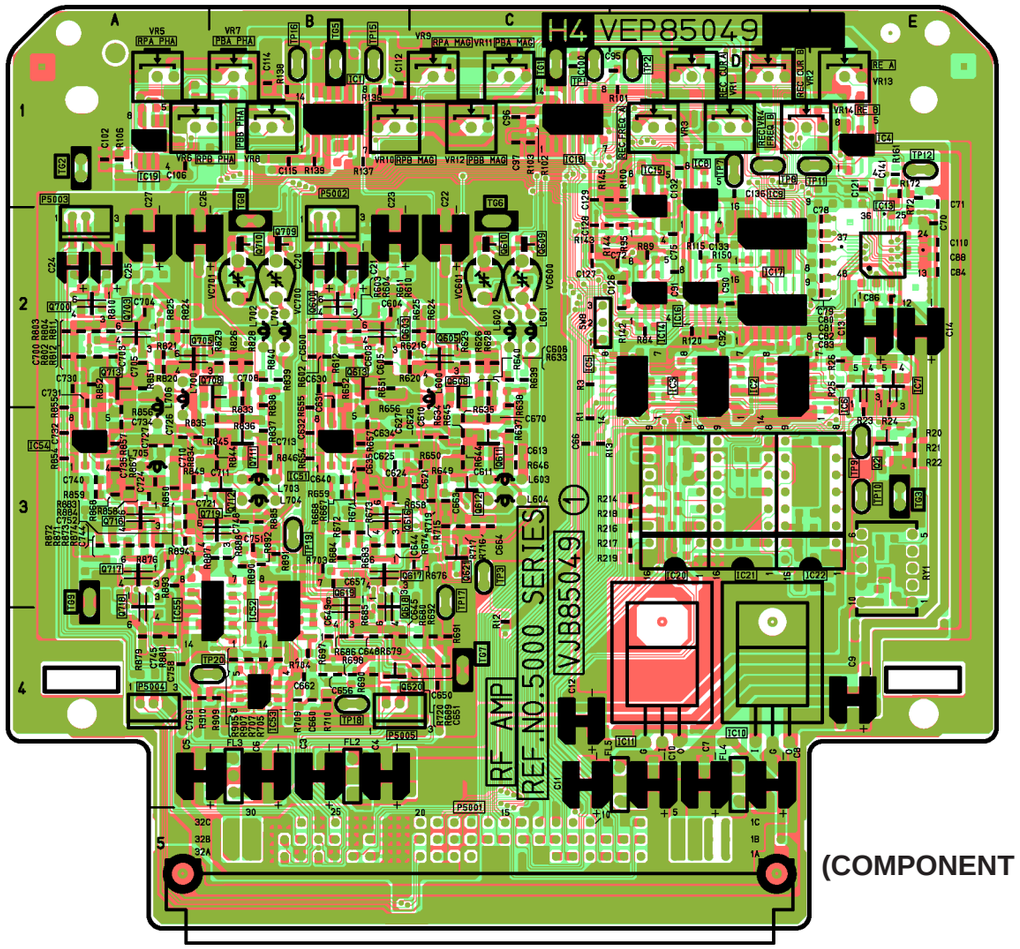

(COMPONENT SIDE)

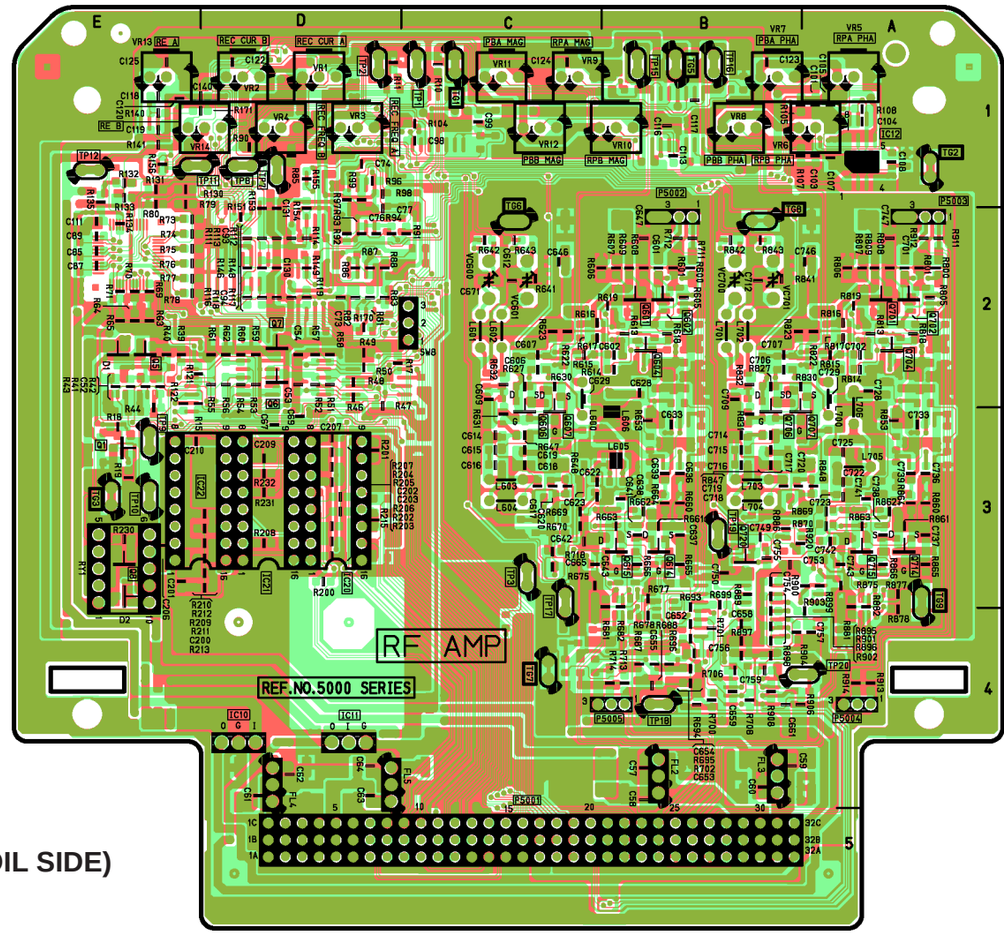

(FOIL SIDE)